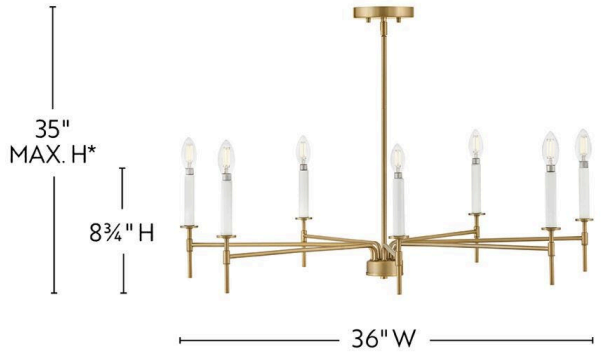

*Maximum achievable height with stems included.

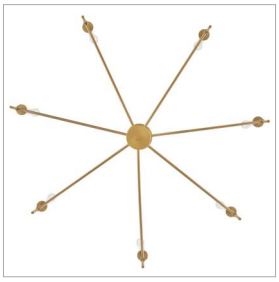

HUX

83077LCB

LARGE SINGLE TIER

If you're on the hunt for easy elegance, say hello to Hux. Dramatic metal stems perfectly pair with candle sleeves to reveal a bold and balanced design. You can have it all with this transitional style that unites turn-of-the-century traditional taste with minimalist modern chic.

DETAILS	
FINISH:	Lacquered Brass
MATERIAL:	Steel
SLOPE DEGREE:	90
DIMMABLE:	YES - WITH DIMMABLE LAMP (NOT INCLUDED)

DIMENSIONS	
WIDTH:	36"
HEIGHT:	8.8"
WEIGHT:	6.4lb

LIGHT SOURCE	
LIGHT SOURCE:	Socketed
WATTAGE:	7-5w Cand. LED, 60w Equiv.
VOLTAGE:	120v

MOUNTING	
CANOPY:	5.25" Dia.
MAX HEIGHT:	35

SHIPPING	
CARTON LENGTH:	38.5
CARTON WIDTH:	10.5
CARTON HEIGHT:	11.8
CARTON WEIGHT:	10.7

PRODUCT DETAILS:

- Suitable for use in dry (indoor) locations as defined by NEC and CEC. Meets United States UL Underwriters Laboratories & CSA Canadian Standards Association Product Safety Standards.
- Please refer to Lark's Warranty for complete product warranty details. Some warranty limitations may apply.
- This item may be hung on a sloped ceiling
- Shown with LED bulbs, not included.
- Heritage but make it hip: these styles combine classic design elements and nostalgic profiles reworked in new proportions and fresh finishes for an authentic vibe
- This product uses recyclable or limited packaging materials to help reduce waste.

LARK

LARK, INC.
33000 Pin Oak Parkway
Avon Lake, OH 44012

PHONE: (440) 653-5500
Toll Free: 1 (800) 446-5539

larkliving.com